TOLERANCE ON FRACTIONAL: 1/16
MACHINE DIMENSION: ±.010

SA120

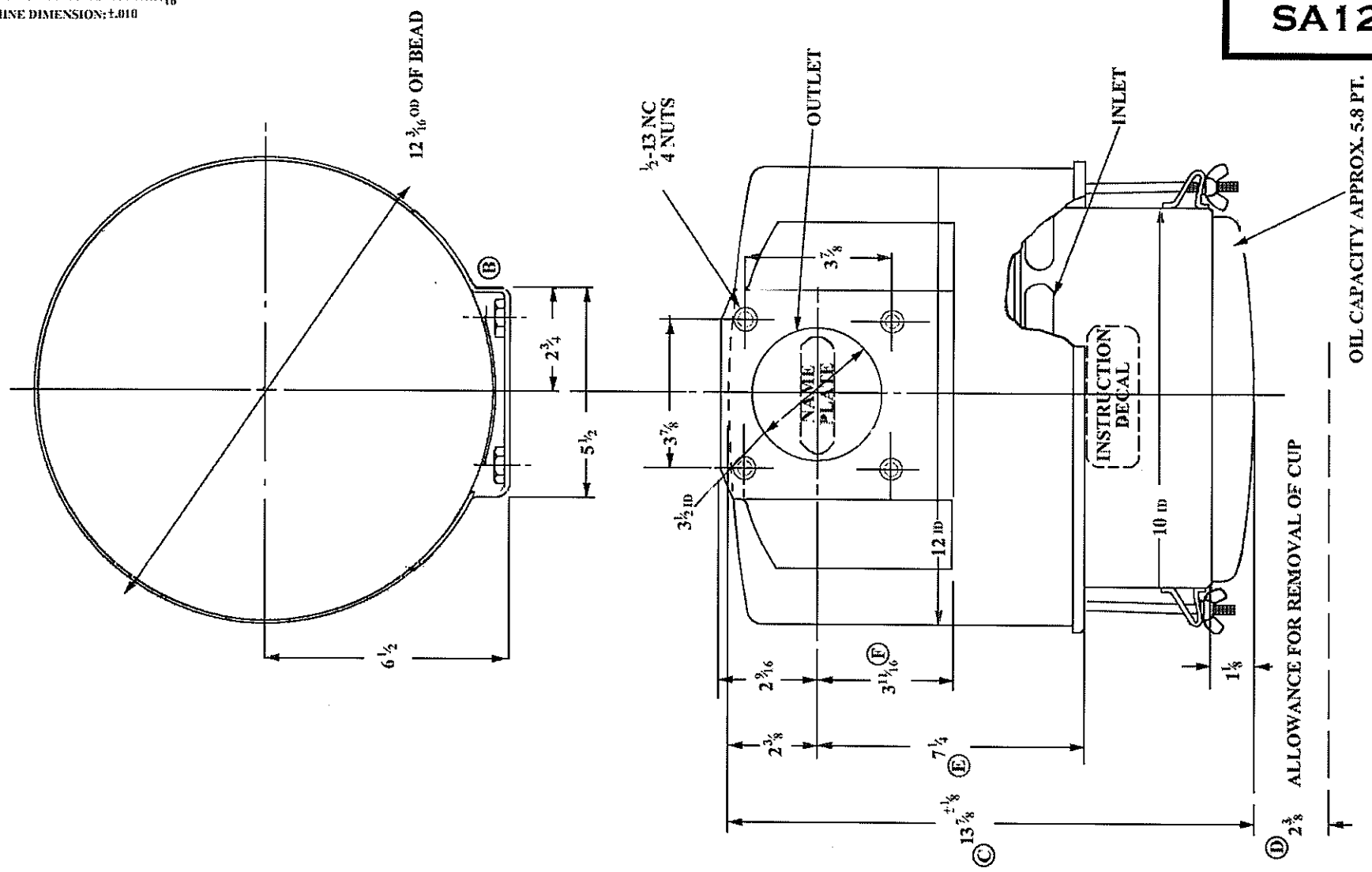

TRANS NO.	CHG. LET.	WAS	DATE	BY	APP.	TRANS NO.	CHG. LET.	WAS	DATE	BY	APP.
						3016	D	2	12/16/60	CB	WH
						4926	C	14	12/16/60	CB	WH
8902	G	VORTOX CO.	8/16/12	JM	KJM	4038	B	CAST BRASS SADDLE	11/8/57	CB	WH
7606	F	5 1/8	11/12/76	HG	GT	3016	A	REDRAWN	9/17/45	EG	
7454	E	7 1/8	11/3/75	RH	RB	3016		REL WAS EX) SA120	9/14/45	EG	

NAME

VORTOX AIR CLEANER

VORTOX AIR TECHNOLOGY, INC.
CLAREMONT, CA, U.S.A
G

DR.	DATE
EG	9/17/45
CK. CL	SCALE QUARTER
ENG. CL	MATERIAL
APPR.	

Part No.
SA120