TOLERANCE ON DIMENSIONS
NOT OTHERWISE SPECIFIED
DECIMAL ±
FRACTIONAL ± 1/16
ANGULAR ±

G120CA2

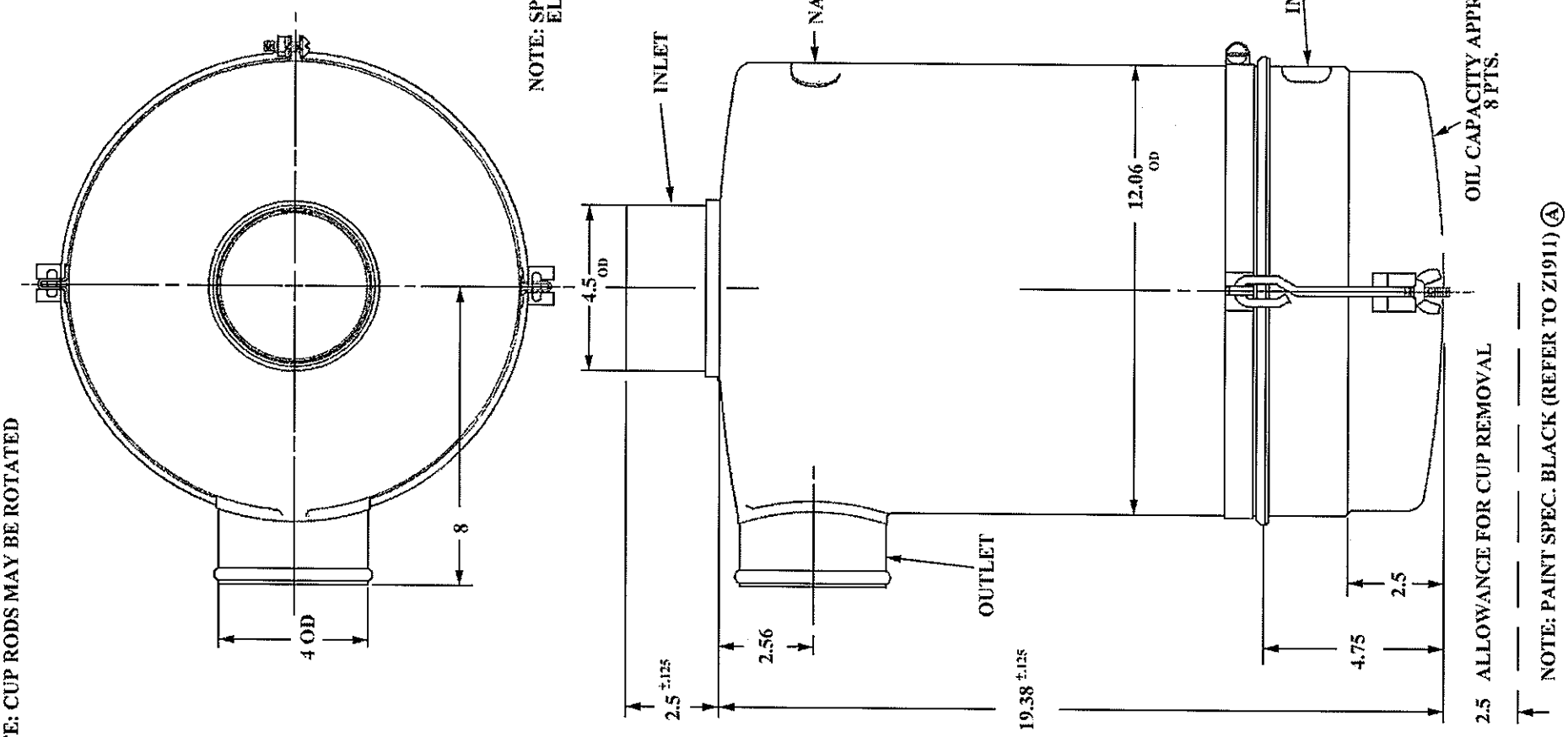

TRANS NO.	CHG. LET.	WAS	DATE	BY	APP.	TRANS NO.	CHG. LET.	WAS	DATE	BY	APP.
						8901	B	VORTOX CO.	3/29/13	JM	KJM
						8773	A	REVISED & REDRAWN	4/2/61	RT	LAI
						5093		REL	10/25/61	AR	CB

NAME

VORTOX AIR CLEANER

VORTOX AIR TECHNOLOGY, INC.
Ⓑ CLAREMONT, CA, U.S.A

DR. AR	DATE 10/23/61
CK. CB	SCALE QUARTER
ENG.	MATERIAL
APPR.	NL
Part No.	G120CA2