TOLERANCE ON DIMENSIONS
NOT OTHERWISE SPECIFIED
DECIMAL ± .x = ±.060
.xx = ±.030
.xxx = ±.010
ANGULAR ±2°

AU100D4

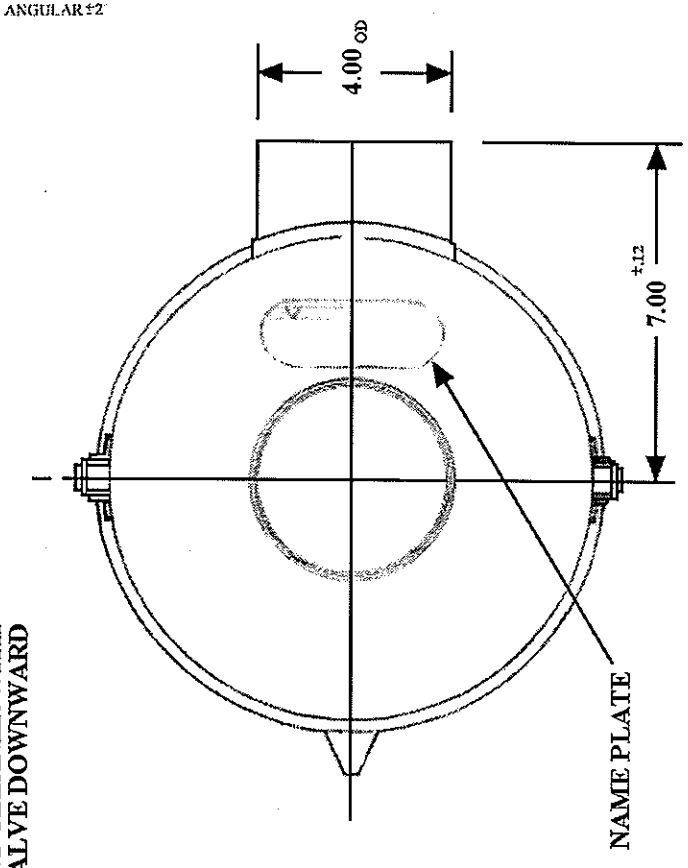

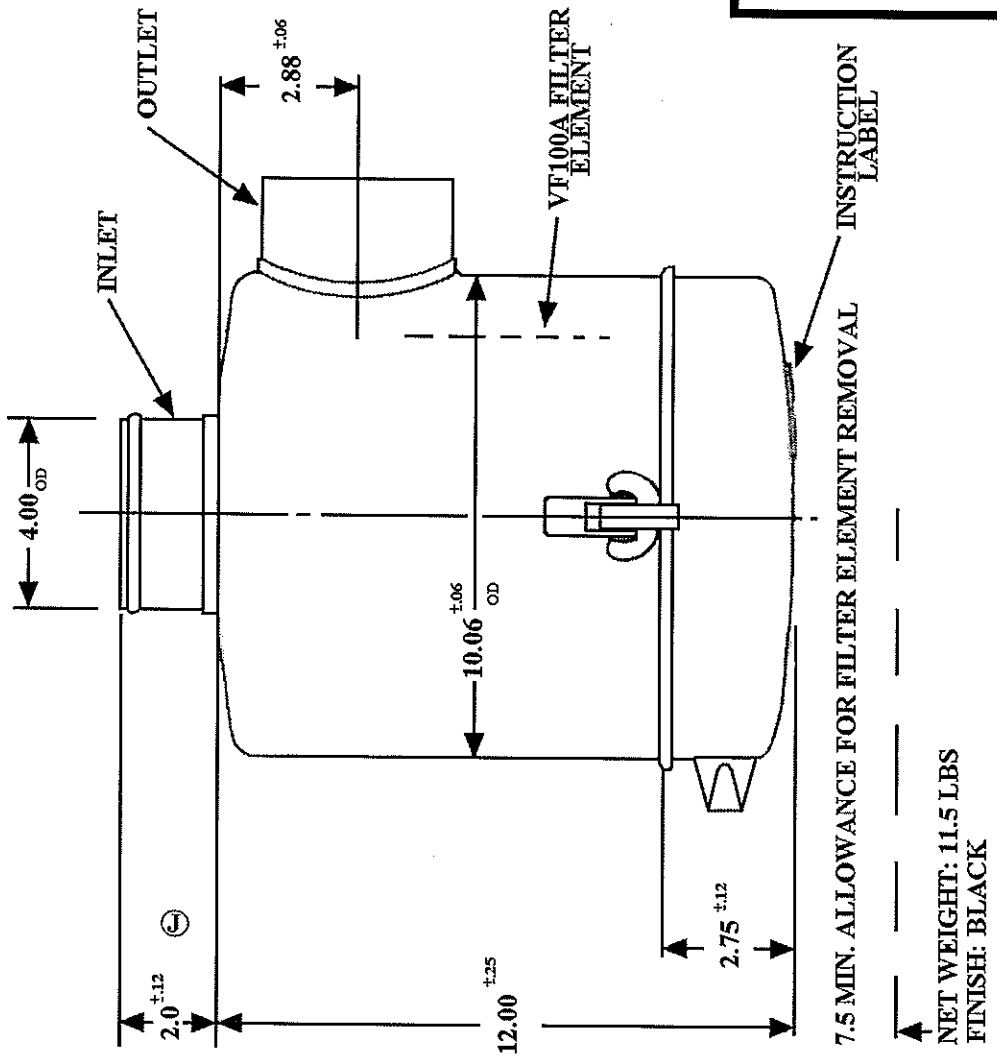

NOTE: MOUNT CLEANER WITH EJECTION VALVE DOWNWARD

TRANS NO.	CHG. LET.	WAS	DATE	BY	APP.

TRANS NO.	CHG. LET.	WAS	DATE	BY	APP.
	K	VORTOX CO.	1/4/10	RT	KJM
	J	2.12 ±.12	4/25/91	HG	CB
	H	REV & REDRAWN	8/7/89	CB	
		REL	4/2/76	RB	GT

NAME
CENTRIFAIR DRY AIR CLEANER

VORTOX AIR TECHNOLOGY, INC.
CLAREMONT, CA, U.S.A

DR. CB	DATE 8/7/89
CK.	SCALE QUARTER
ENG.	MATERIAL
APPR.	
Part No.	AU100D4