TOLERANCE ON DIMENSIONS
NOT OTHERWISE SPECIFIED
DECIMAL X=±.060
XX=±.030
XXX=±.010
ANGULAR ±2°

AD140Y4

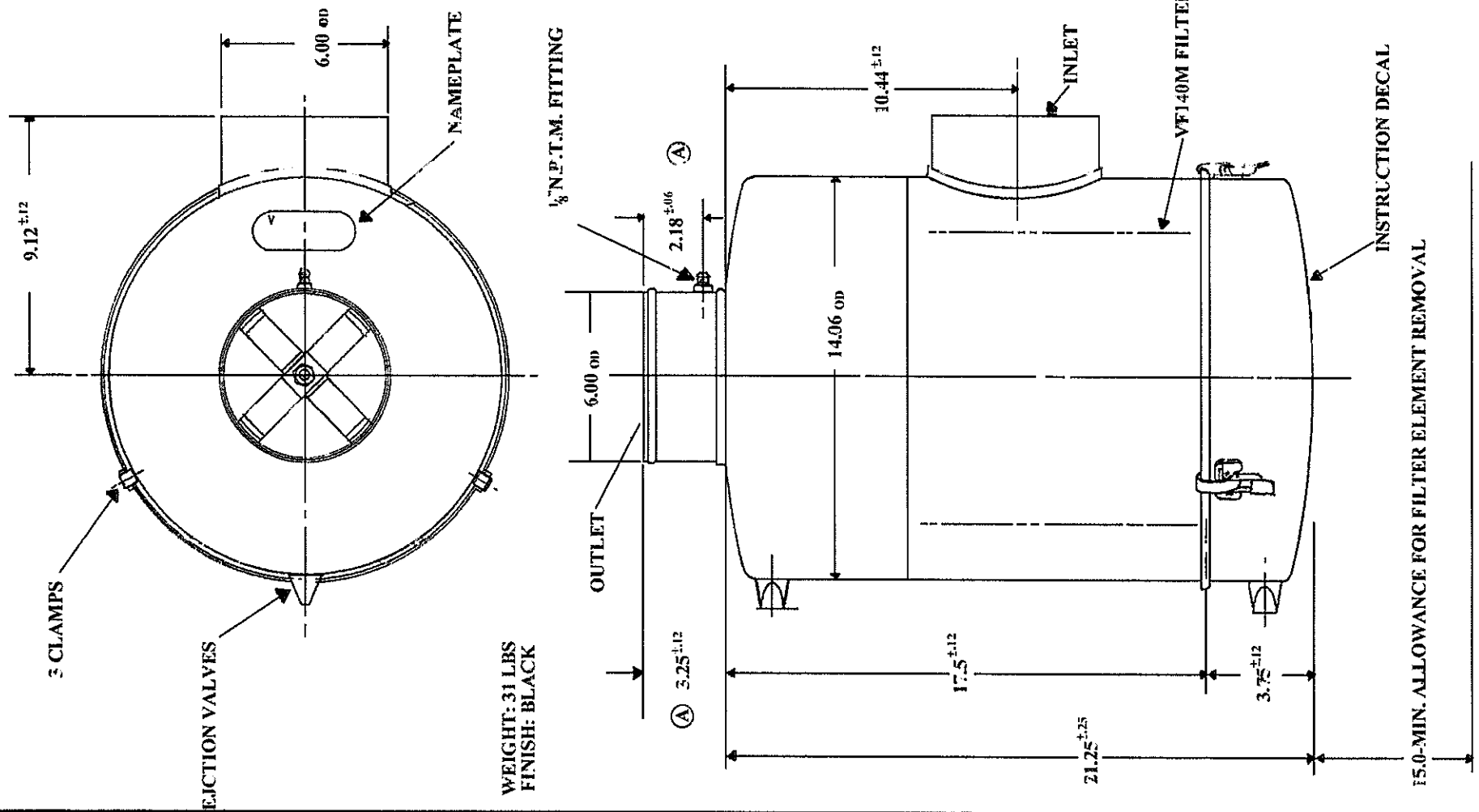

TRANS NO.	CHG. LET.	WAS	DATE	BY	APP.	TRANS NO.	CHG. LET.	WAS	DATE	BY	APP.
						8902	B	VORTOX CO.	1/4/10	RT	KJM
						8405	A	3.0 ±.12, 2.12	5/10/91	HG	CB
						8405		REL	4/19/91	HG	CB

NAME

CENTIFAIR DRY AIR CLEANER

VORTOX AIR TECHNOLOGY, INC.
CLAREMONT, CA, U.S.A
B

DR. HJG	DATE 4/19/91
CK. CB	SCALE 3/16" = 1"
ENG.	MATERIAL STEEL
APPR.	

Part No.
AD140Y4